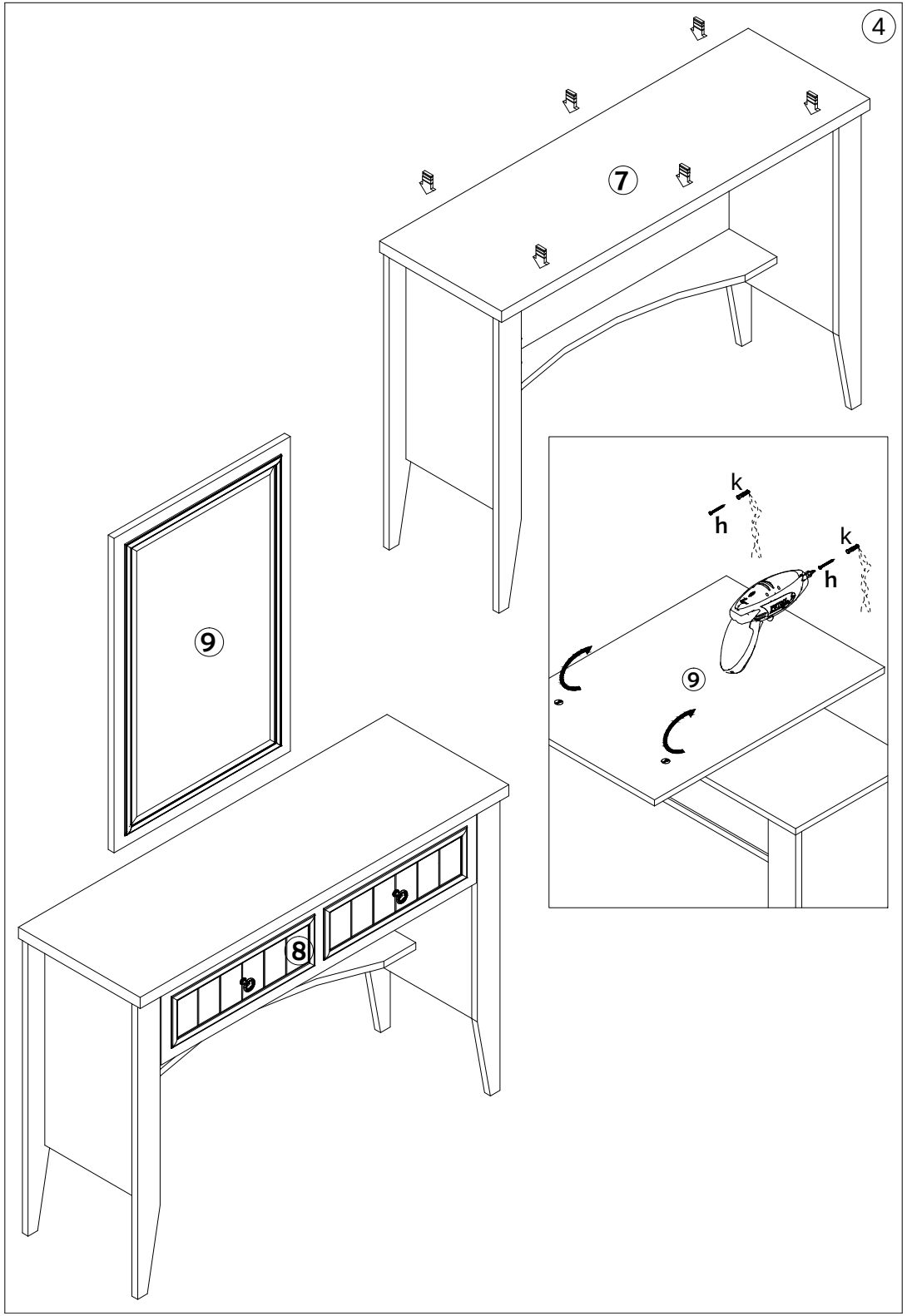


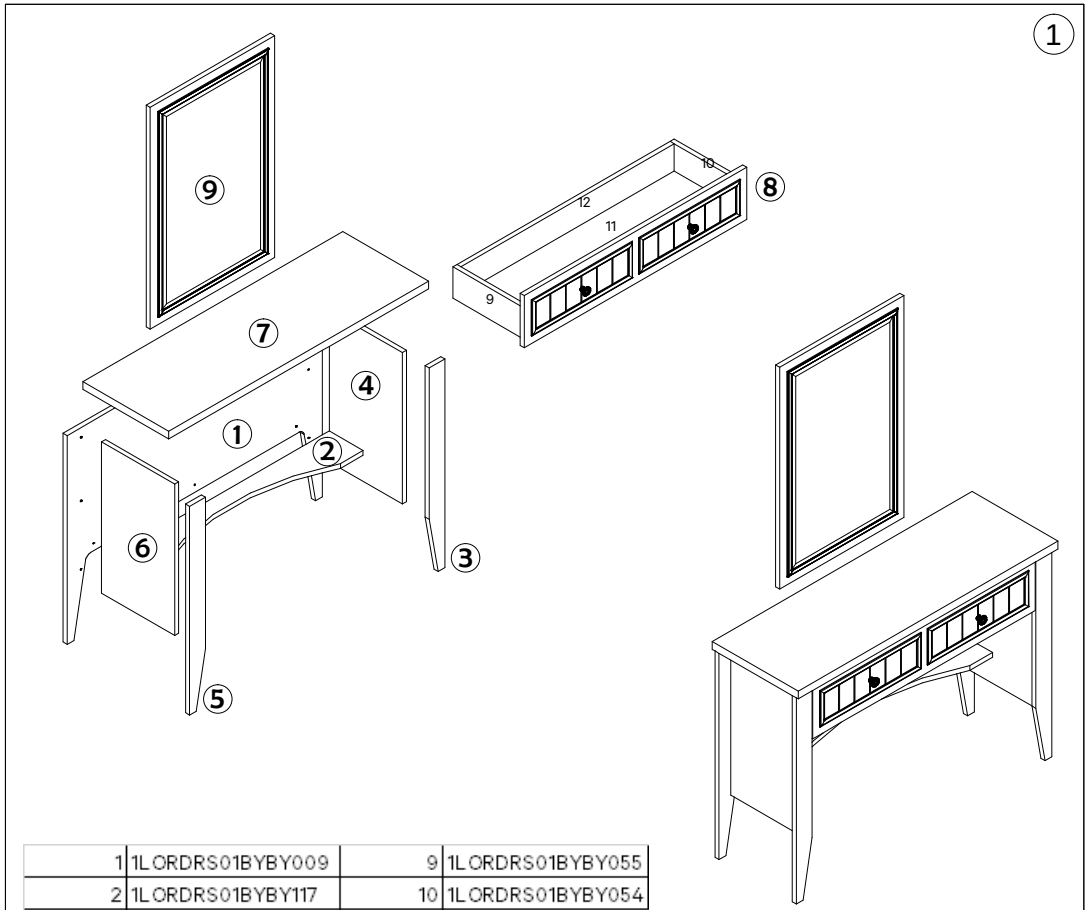


| | | | |
|---|---|---|---|
| 1 | 1LORDRS01BYBY009 | 9 | 1LORDRS01BYBY055 |
| 2 | 1LORDRS01BYBY117 | 10 | 1LORDRS01BYBY054 |
| 3 | 1LORDRS01BYBY012 | 11 | 1LORDRS01GCGC048 |
| 4 | 1LORDRS01BYBY143 | 12 | 1LORDRS01BYBY042 |
| 5 | 1LORDRS01BYBY011 | | |
| 6 | 1LORDRS01BYBY165 | | |
| 7 | 1LORDRS01EBEB172 | | |
| 8 | 1LORDRS01BYBY189 | | |

| | | | | | |
|---|---|---|---|---|---|
| LORA | a 0BLT0039 x14 | | b 0BLT0033 x8 | c 0BLT0068 x13 | d 0BLT0064 x4 |
| 15' | e 0BLT0066 x2 | f 0AKS0009 x2 | g 0BLT0063 3,5x25mm RYSB x5 | h 0BLT0060 4x60mm x2 | i 0HRK0025 x1 |
| | k 0BLT0028 x2 | l 0BLT0042 x14 | m 0BLT0073 x14 | | |

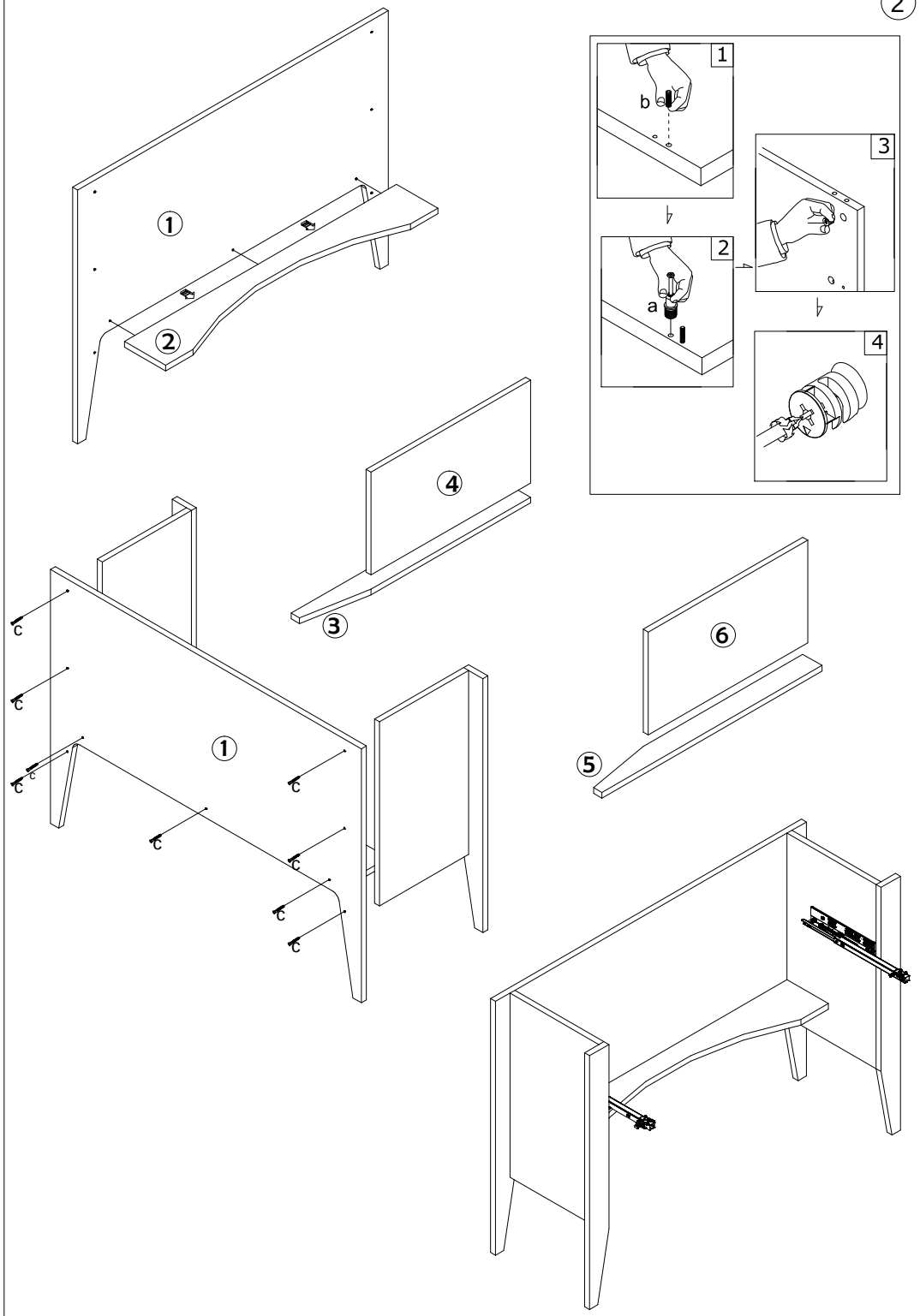
1
2
3
4
5
6
a
b
c
1
2
3
4



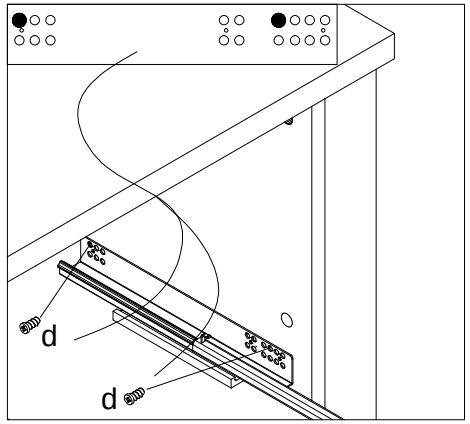
d
d

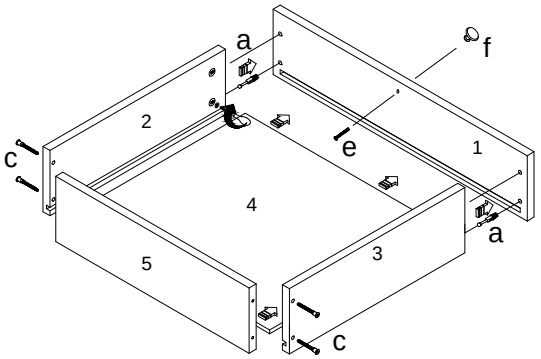
a
f
2
1
c
e
4
a
5
3
c

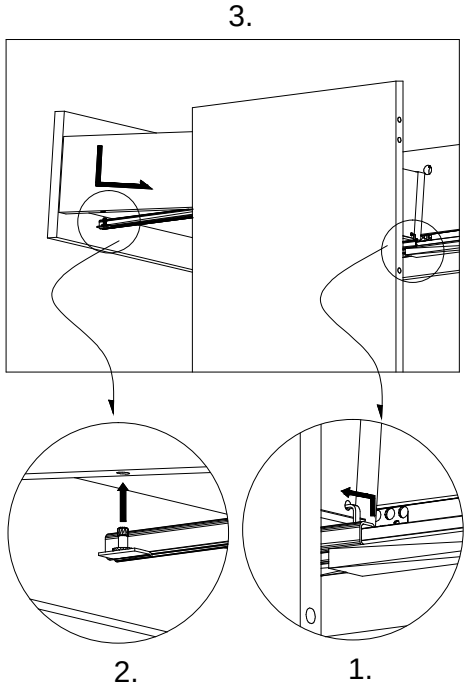
3.
2.
1.

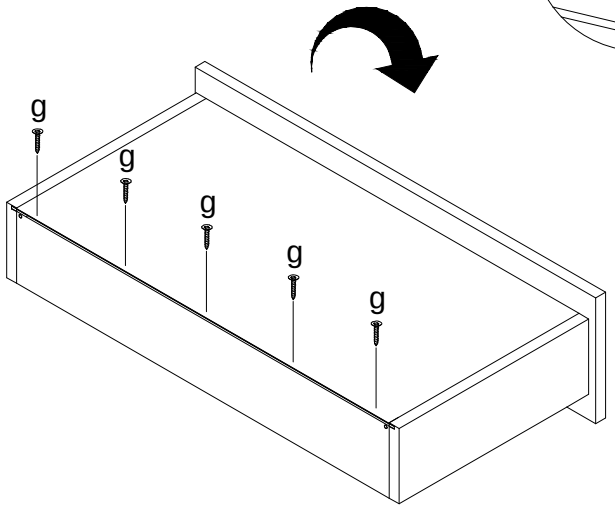
g
g
g
g
g